Susan Hatchell
Landscape Architecture, PLLC

711 West North Street
Raleigh, NC 27603
Tel: 919.838.9600
e-mail: jennifer@susanhatchell.com

To: All Interested Bidders and Plan Holders
From: Jennifer Steed, Senior Project Manager
RE: Lake Myra County Park Phase 1 (RFB#26-077)
Addendum No. 4 – FINAL ADDENDUM
Date: September 30, 2026

The following items clarify, add to, delete from and/or otherwise change and supersede information previously issued to you in the Bid Documents for the above-referenced project. As such, said items shall be considered part of the contract and receipt of this addendum shall be acknowledged appropriately in the bid package. Please review the following items carefully and adjust your proposal accordingly.

Items:

1. See attached updated site structural sheets from NV5 which supersede those sent in Addendum 3 on September 29, 2026.

2. See attached updated Section 323300, Site Furnishings, revised to include 6' backless bench and viewer scope information for Boardwalk A (Alternate 1).

3. Where requirements in Section 323113, Chain Link Fences and Gates conflict with Detail 1/L-604, Detail 1/L-604 governs. Revise Section 323113 to require 9-gauge, 2-inch mesh, black vinyl/PVC-coated chain-link fabric with 2-inch O.D. line posts and 3-inch O.D. terminal, end, corner, and pull posts, all as shown on Detail 1/L-604.

4. Bidder question: Drawing WW-11 indicates two 120-volt, 20-amp pump circuits and one 120-volt, 15-amp control circuit. Panel WPS indicates 25-amp breakers for the pump circuits. Please confirm the required circuit and overcurrent-protection ratings. Also identify the required feeders, branch circuits, disconnects, control wiring, alarm wiring, and equipment connections to be provided by electrical contractor outside the packaged wastewater treatment system
    a. **Response: The electrical drawings show three 120V circuits to the septic control panel. The Contractor is responsible for providing and installing a fully functional wastewater treatment and disposal system**

5. Bidder question: The wastewater treatment system notes require a phone or internet connection to the control panel. Please identify the selected communication method, service point, pathway routing, conduit size, required backboxes or enclosures, and the location where the communication pathway is to terminate
    a. **Response: General Contractor should assume cellular service for alarm.**

Susan
Hatchell
Landscape Architecture, PLLC

711 West North Street
Raleigh, NC 27603
Tel: 919.838.9600
e-mail: jennifer@susanhatchell.com

6. Bidder question: West wastewater system: The WWTS package includes a control panel, pumps, UV, floats, solenoids, and internet notification. Please provide the electrical/control circuit schedule and define who furnishes and installs the panel, underground power/control conduits and cabling, field devices, internet connection, terminations, programming, and commissioning.
    a. **Response: The Contractor is responsible for providing and installing a fully functional wastewater treatment and disposal system**

7. Bidder question: The concrete paving spec 321313 reads like the GC is to provide the field quality testing agency. Can you confirm the owner will handle this?
    a. **Response: The Owner will provide third party testing**

Docusign Envelope ID: FCF01486-04B7-8C0B-8131-CBFBC52ABC46

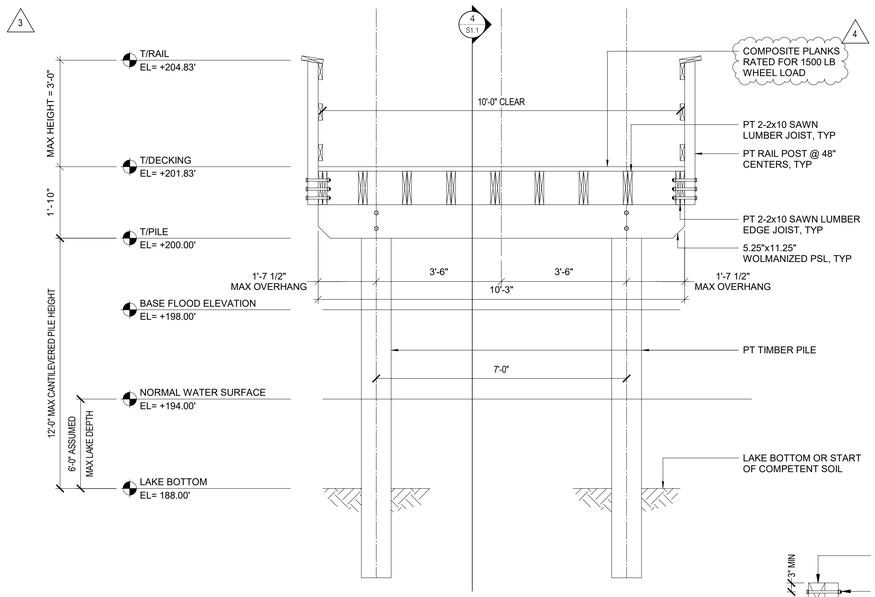

1 S1.1 SECTION
BENT ELEVATION - 12'-0" MAX CANTILEVERED HEIGHT
SCALE: 1/2" = 1'-0"

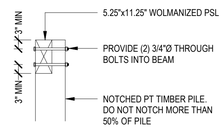

BEAM ATTACHMENT TO PILE

NOTES:
1. CROSS BRACING REQUIRED AT LOCATIONS WHERE HEIGHT OF PILE FROM TOP OF COMPETENT SOIL TO TOP OF PILE EXCEEDS 12'-0".
2. REFER TO DETAIL 1/S1.1 FOR ADDITIONAL INFORMATION.

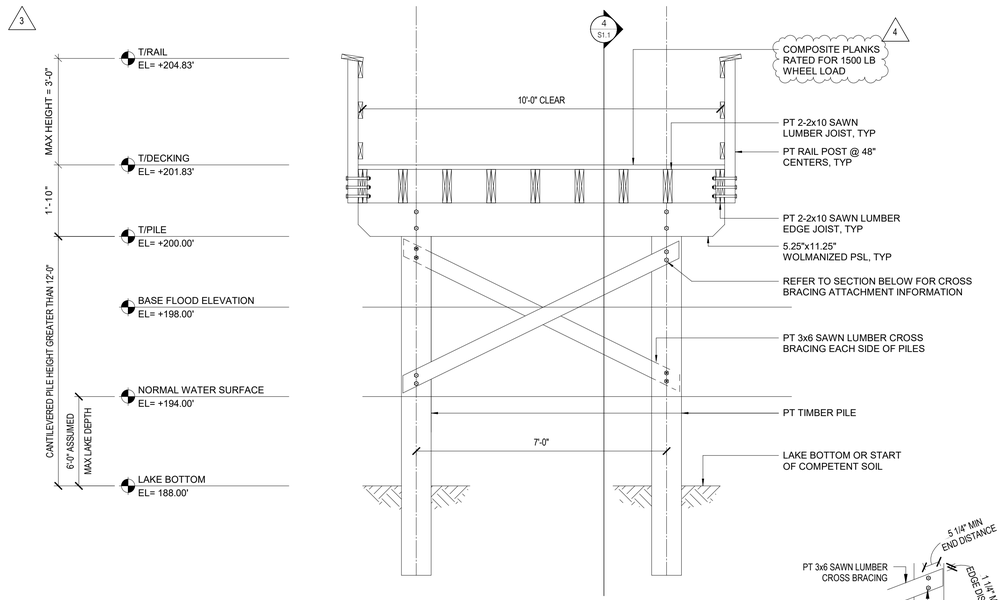

2 SECTION
ALTERNATE 1: BENT ELEVATION - CANTILEVERED PILE HEIGHT GREATER THAN 12'-0"
SCALE: 1/2" = 1'-0"

CROSS BRACING ATTACHMENT TO PILE

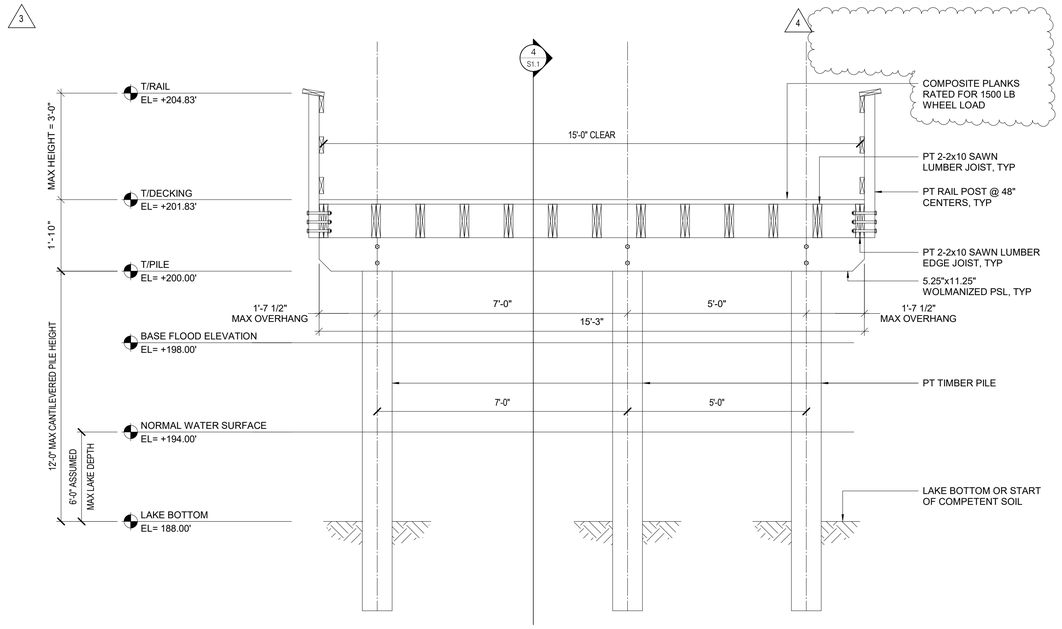

3 SECTION
ALTERNATE 1: BENT ELEVATION AT LOOKOUT
SCALE: 1/2" = 1'-0"

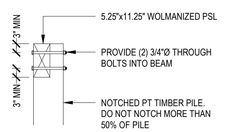

BEAM ATTACHMENT TO PILE

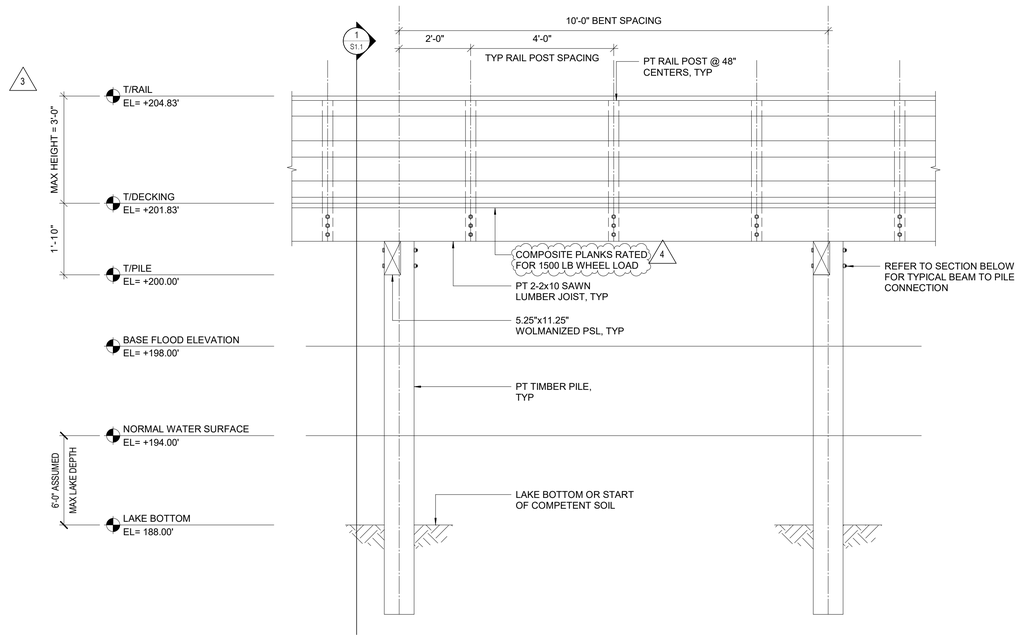

4 S1.1 SECTION
TYPICAL SPAN ELEVATION
SCALE: 1/2" = 1'-0"

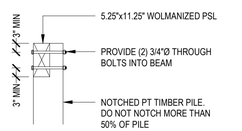

BEAM ATTACHMENT TO PILE

Susan Hatchell
Landscape Architecture, PLLC
711 W. North Street, Raleigh, NC 27603
p: 919-838-9600 f: 919-838-9700

NV5
NV5 ENGINEERS & CONSULTANTS, INC.
3300 REGENCY PARKWAY
CARY, NC 27518
P: 919.851.1912 www.NV5.com
NC License # F-1333 Project # 2023018.00 Engineer #054

Signed by:
4BB1C3F274B7442...
September 30, 2026
NORTH CAROLINA PROFESSIONAL ENGINEERING CORP. F-1333

TYPICAL BRIDGE DETAILS

LAKE MYRA COUNTY PARK
Wake County, NC

REVISIONS

3	ADDENDUM 3	9/29/2026
4	ADDENDUM 4	9/30/2026

Date: 8/20/2026

S1.1

9/30/2026 2:01:05 PM

Docusign Envelope ID: FCF01486-04B7-8C0B-8131-CBFBC52ABC46

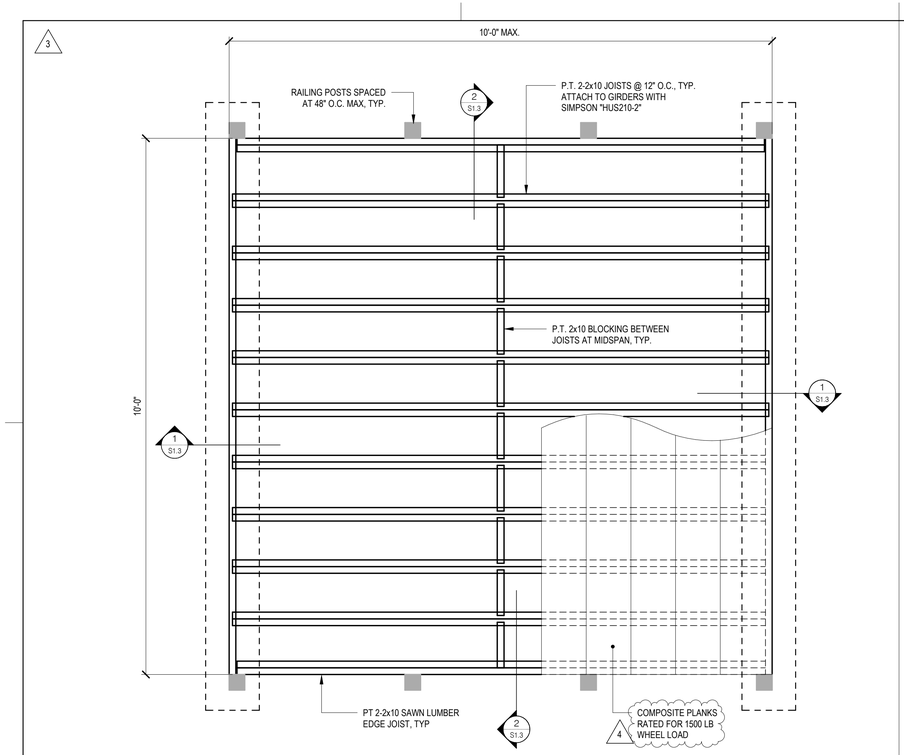

1 FRAMING PLAN - 10x10 BOARDWALK
SCALE: 3/4" = 1'-0"

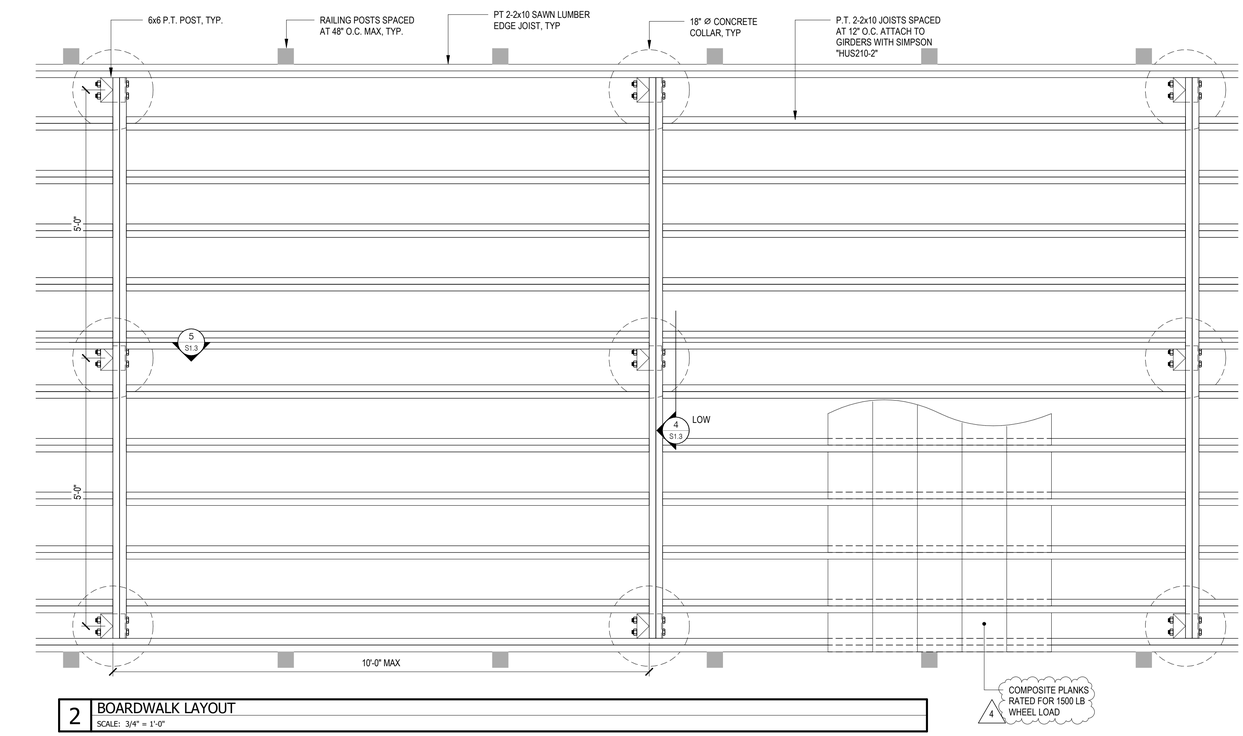

2 BOARDWALK LAYOUT
SCALE: 3/4" = 1'-0"

NOTE:
1. MAINTENANCE LOADING NOT PERMITTED ON LOOKOUT.

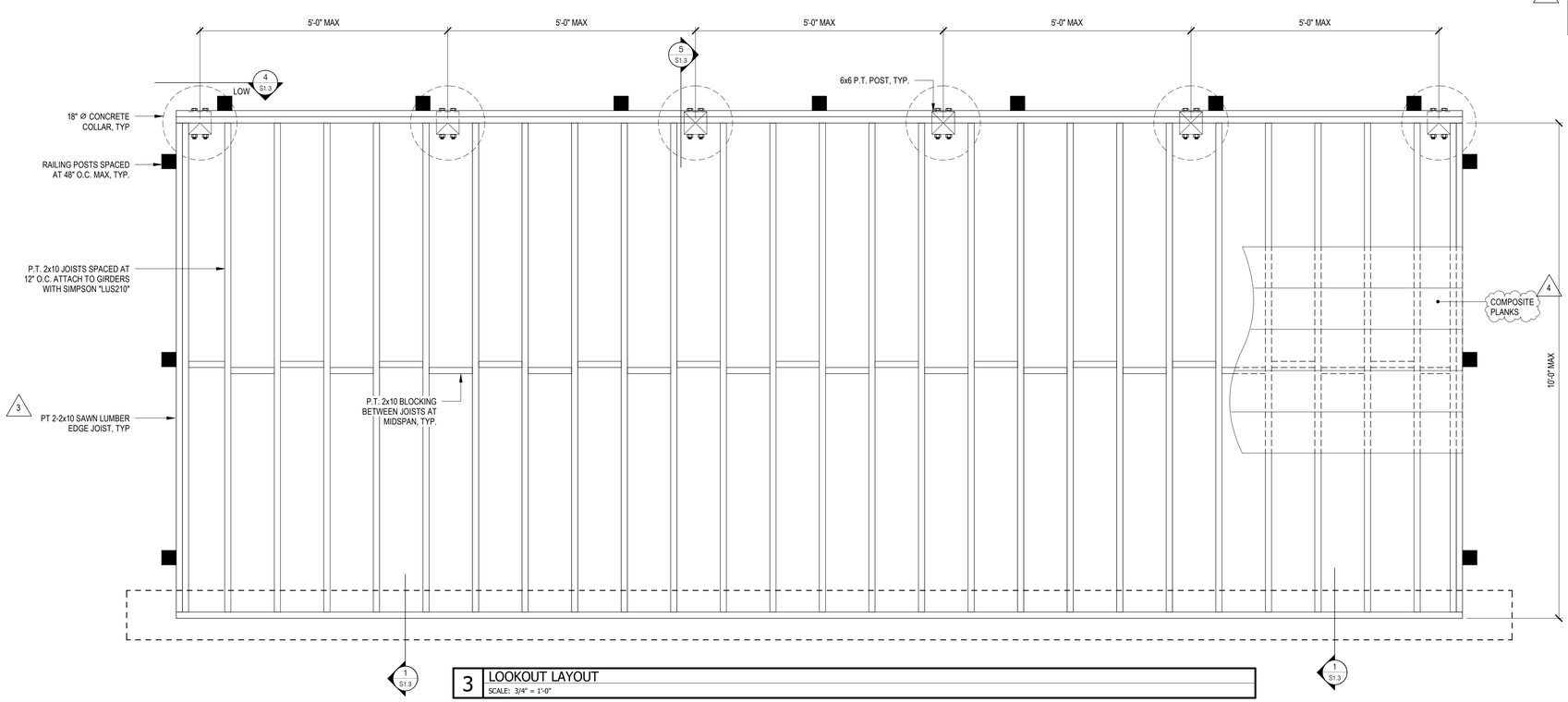

3 LOOKOUT LAYOUT
SCALE: 3/4" = 1'-0"

Susan Hatchell
Landscape Architecture, PLLC
711 W. North Street, Raleigh, NC 27603
p: 919-838-9600 f: 919-838-9700

NV5
NV5 ENGINEERS & CONSULTANTS, INC.
3300 REGENCY PARKWAY
CARY, NC 27518
P: 919.851.1912 www.NV5.com
NC License # F-1333 Project # 2022C018.00 Engineer:KBM

Signed by:
4BB1C3F274B7442...
September 30, 2026
NORTH CAROLINA PROFESSIONAL ENGINEERING CORP. F-1333

BOARDWALK PLANS

LAKE MYRA COUNTY PARK
Wake County, NC

REVISIONS

3	ADDENDUM 3	9/29/2026
4	ADDENDUM 4	9/30/2026

Date: 8/20/2026

S1.2

Docusign Envelope ID: FCF01486-04B7-8C0B-8131-CBFBC52ABC46

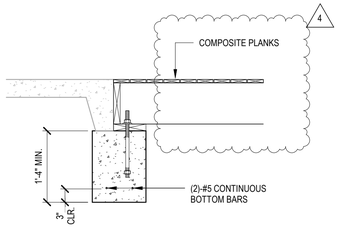

1 / S1.2 SECTION
BOARDWALK END SECTION AT FOOTING
SCALE: 3/4" = 1'-0"

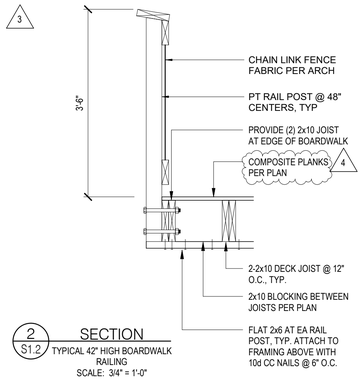

2 / S1.2 SECTION
TYPICAL 42" HIGH BOARDWALK RAILING
SCALE: 3/4" = 1'-0"

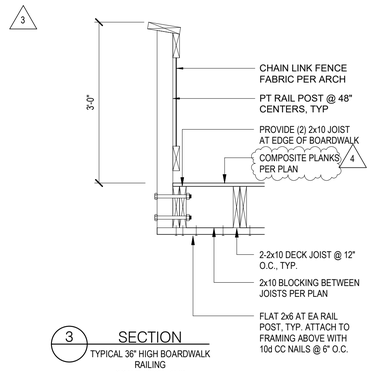

3 / SECTION
TYPICAL 36" HIGH BOARDWALK RAILING
SCALE: 3/4" = 1'-0"

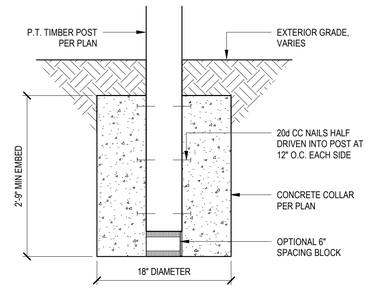

4 / S1.2 SECTION
TIMBER POST BASE CONNECTION WITH CONCRETE COLLAR
SCALE: 3/4" = 1'-0"

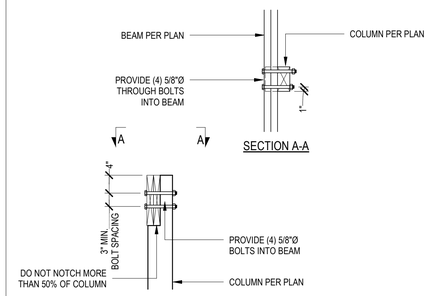

5 / S1.2 SECTION
TYPICAL NOTCHED COLUMN TO CONTINUOUS BEAM CONNECTION
SCALE: 3/4" = 1'-0"

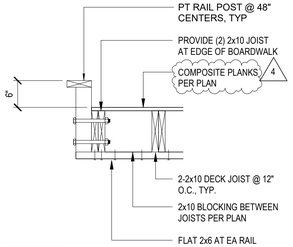

6 / SECTION
TYPICAL SHORT BOARDWALK RAILING
SCALE: 3/4" = 1'-0"

Susan Hatchell
Landscape Architecture, PLLC
711 W. North Street, Raleigh, NC 27603
p: 919-838-9600 f: 919-838-9700

NV5
NV5 ENGINEERS & CONSULTANTS, INC.
3300 REGENCY PARKWAY
CARY, NC 27518
P: 919.851.1912 www.NV5.com
NC License # F-1333 Project # 2022008.00 Engineer:KBM

Signed by:
4BB1C3F274B7442...
September 30, 2026
NORTH CAROLINA PROFESSIONAL ENGINEERING CORP. F-1333

TYPICAL BOARDWALK DETAILS

LAKE MYRA COUNTY PARK
Wake County, NC

REVISIONS

3	ADDENDUM 3	9/29/2026
4	ADDENDUM 4	9/30/2026

Date: 8/20/2026

S1.3

SECTION 323300 – SITE FURNISHINGS

PART 1 - GENERAL

1.1 RELATED DOCUMENTS

A. Drawings and general provisions of the Contract, including General and Supplementary Conditions and other Division 01 Specification Sections, apply to this Section.

1.2 SUMMARY

A. This Section includes the following:

1. Recycled Plastic Benches.
2. Rectangular picnic tables.
3. Round picnic tables.
4. Bicycle racks.
5. Trash and recycling receptacles.
6. Hand pump for water play.
7. Gates for water play.
8. Grill.
9. Viewer scope for Boardwalk A (Alternate 1)
10. Backless Bench for Boardwalk A (Alternate 1)

B. Related Sections include the following:

1. Section 033000 "Cast-in-Place Concrete" for concrete footings.
2. Section 310000 "Earthwork" for excavation for installation of concrete footings.

1.3 SUBMITTALS

A. Product Data: For each type of product indicated.

B. Samples for Initial Selection: For units with factory-applied color finishes.

C. Product Schedule: For site furnishings. Use same designations indicated on Drawings.

D. Material Certificates: For site furnishings, signed by manufacturers.

1. Recycled plastics.

E. Maintenance Data: For site furnishings to include in maintenance manuals.

1.4 QUALITY ASSURANCE

A. Source Limitations: Obtain each type of site furnishing(s) through one source from a single manufacturer.

1.5 EXTRA MATERIALS

A. Furnish extra materials described below that match products installed and that are packaged with protective covering for storage and identified with labels describing contents.

1. Bench Replacement Planks: No fewer than two full-size units for each size indicated.

PART 2 - PRODUCTS

2.1 MATERIALS

A. Aluminum: Alloy and temper recommended by aluminum producer and finisher for type of use and finish indicated; free of surface blemishes and complying with the following:

1. Rolled or Cold-Finished Bars, Rods, and Wire: ASTM B 211 (ASTM B 211M).
2. Extruded Bars, Rods, Wire, Profiles, and Tubes: ASTM B 221 (ASTM B 221M).
3. Structural Pipe and Tube: ASTM B 429.
4. Sheet and Plate: ASTM B 209 (ASTM B 209M).
5. Castings: ASTM B 26/B 26M.

B. Steel and Iron: Free of surface blemishes and complying with the following:

1. Plates, Shapes, and Bars: ASTM A 36/A 36M.
2. Steel Pipe: Standard-weight steel pipe complying with ASTM A 53, or electric-resistance-welded pipe complying with ASTM A 135.
3. Tubing: Cold-formed steel tubing complying with ASTM A 500.
4. Mechanical Tubing: Cold-rolled, electric-resistance-welded carbon or alloy steel tubing complying with ASTM A 513, or steel tubing fabricated from steel complying with ASTM A 1011/A 1011M and complying with dimensional tolerances in ASTM A 500; zinc coated internally and externally.
5. Malleable-Iron Castings: ASTM A 47/A 47M, grade as recommended by fabricator for type of use intended.
6. Gray-Iron Castings: ASTM A 48/A 48M, Class 200.

C. Plastic: Color impregnated, color and UV-light stabilized, and mold resistant.

1. Polyethylene: Fabricated from virgin plastic HDPE resin.
2. Recycled Polyethylene: Fabricated from not less than 100 percent recycled, purified, fractional-melt plastic resin HDPE.

D. Anchors, Fasteners, Fittings, and Hardware: Manufacturer's standard, corrosion-resistant-coated or noncorrodible materials

E. Nonshrink, Nonmetallic Grout: Premixed, factory-packaged, nonstaining, noncorrosive, nongaseous grout complying with ASTM C 1107; recommended in writing by manufacturer, for exterior applications.

F. Erosion-Resistant Anchoring Cement: Factory-packaged, nonshrink, nonstaining, hydraulic-controlled expansion cement formulation for mixing with potable water at Project site to create pourable anchoring, patching, and grouting compound; resistant to erosion from water exposure without needing protection by a sealer or waterproof coating; recommended in writing by manufacturer, for exterior applications.

G. Galvanizing: Where indicated for steel and iron components, provide the following protective zinc coating applied to components after fabrication:

1. Zinc-Coated Tubing: External, zinc with organic overcoat, consisting of a minimum of 0.9 oz./sq. ft. (0.27 kg/sq. m) of zinc after welding, a chromate conversion coating, and a clear, polymer film. Internal, same as external or consisting of 81 percent zinc pigmented coating, not less than 0.3 mil (0.0076 mm) thick.
2. Hot-Dip Galvanizing: According to ASTM A 123/A 123M

2.2 RECYCLED PLASTIC BENCHES

A. Product: 6-FT long Pilot Rock RJ Thomas Mfg. Co, Inc. (#1-800-762-5002) Contour Park Bench – Multi-Pedestal Model# WRB or approved equal. Color shall be **Brown**.

B. In ground mounted as per manufacture recommendations.

C. Concrete footing shall be double the dia. of the post and shall be 3000 PSI concrete.

2.3 RECTANGULAR PICNIC TABLES

A. Products:

1. Pilot Rock. #1-800-762-5002: Model UT and UTH End Accessible Picnic Table or approved equal. – Color: Submit standard color options to Owner for selection.

B. Frame: All welded 1-5/8" OD steel pipe end frames (1.660" OD, 11 ga. wall, 1-1/4" ID nom. pipe specifications). All 3/8" dia. galvanized carriage bolt fasteners.

1. Frame Finish: Hot dip galvanized after fabrication.

C. Recycled Plastic Seat and Tabletop: As per manufacturer Color to be determined by owner.

1. Description: Per manufacturer.

D. Installation Method: Per manufacturer, surface mounted (anchored) to concrete sidewalk.

E. Anchors, Fasteners, Fittings, and Hardware: Commercial quality; tamperproof, vandal and theft resistant; concealed, recessed, and capped or plugged. Provide as required for site and street furnishings' assembly, mounting, and secure attachment per manufacturer.

1. Material: Manufacturer's standard, corrosion-resistant-coated or non-corrodible materials.

F. Non-shrink, Nonmetallic Grout: ASTM C 1107; for exterior applications.

G. Erosion-Resistant Anchoring Cement: Factory-packaged formulation that is resistant to erosion from water exposure without needing protection by a sealer or waterproof coating and that is recommended for exterior applications.

2.4 ROUND PICNIC TABLES

A. Products:

1. Kay Park 46” Round Perforated Table, Thermoplastic. Model: 4-seat option MC46PSRTP and Model: 3-seat option MC46PSRTPADA3 or approved equal. – Color: Submit standard color options to Owner for selection.

B. Top and seats: ½” punched steel

C. Frame: ¾” x 2” Angle Iron Outer Frame, 2” Round Tubing Frame Material

1. Frame Finish: Hot dip galvanized after fabrication.

D. Thermoplastic Coated Seat and Tabletop: As per manufacturer Color to be determined by owner.

1. Description: Per manufacturer.

E. Installation Method: Per manufacturer, surface mounted (anchored) to concrete sidewalk.

2.5 BICYCLE RACKS

A. Products: Landscape Forms ‘Ride’ Bike Rack or approved equal

B. Bicycle Rack Construction:

1. Frame: Aluminum Casting

2. Style: Double-side parking

a. Overall Height: 26”
b. Overall Length: 28”
c. Overall Depth: As indicated by manufacturer
d. Capacity: Designed to accommodate no fewer than two bicycles

3. Installation Method: Embedded

C. Finish: factory applied powdercoat (primer plus two finish coats) Color to be selected by owner.

2.6 TRASH AND RECYCLING RECEPTACLES

A. General: 32-gallon, powder coat finished, heavy-duty steel receptacle with rain bonnet and 32-gallon liner. Color: **Green for Recycle, Tan for Waste.** Receptacles to be designed for surface mounting to concrete sidewalk.

B. Products:

1. Pilot Rock. #1-800-762-5002), 32-gallon receptacle with dome lid and weld steel frame ring. (model TRH #SPC-TR-004) or approved equal.

   a. Trash Lid Model #CN-PD-27.
   b. Recycle Lid Model #CN-PC Series.
   c. Inner Liner Model #CNG-2310C

2. Installation method – Surface Pedestal Mount

3. Finish: 100% Recycled Plastic slats with solid color and U.V. stabilizer for ultraviolet protection. (see above for colors)

2.7 HAND PUMP FOR WATER PLAY

A. Product: Goric Winder Pump Model E5662900, to use onsite potable water connection or approved equal.

1. Installation method – Surface pedestal mount

2. Finish: Stainless Steel

2.8 GATES FOR WATER PLAY

A. Product: Goric Balance Gate Model E5663010, Flap Gate Model E5663040, and Draw Gate Model E5663030, or approved equal.

1. Installation method – Embedded

2. Finish: Stainless Steel

2.9 GRILL

A. Products: Pilot Rock Model N-20, Multilevel Park Grill or approved equal

B. Grill Construction:

1. Firebox – 3/16” plate steel

2. Grate – 5/8” dia. A-36 steel bars for support handles and ½” dia. A-36 steel bars spaced 1-1/8” on center, permanently attached to firebox

3. Size:

a. Overall Height: 36 3/16”
b. Overall width: 25 3/8”

4. Installation Method: Embedded in a 12” dia., 36” deep concrete footing

C. Finish: Stainless steel

2.10 Viewer Scope for Boardwalk A (Alternate 1)

A. Product: SeeCoast Manufacturing Company, Inc. Mark II Dual ADA Complaint Base or approved equal.

1. Installation method – Surface pedestal mount

2.11 Recycled 6’ Backless Bench for Boardwalk A (Alternate 1)

A. Product: Product: 6-FT long Pilot Rock RJ Thomas Mfg. Co, Inc. (#1-800-762-5002) Recycled Plastic Multi-Pedestal Model# PWB3-6 or approved equal. Color shall be **Brown**.

B. Surface mounted as per manufacture recommendations.

1.2 FABRICATION

A. Metal Components: Form to required shapes and sizes with true, consistent curves, lines, and angles. Separate metals from dissimilar materials to prevent electrolytic action.

B. Welded Connections: Weld connections continuously. Weld solid members with full-length, full-penetration welds and hollow members with full-circumference welds. At exposed connections, finish surfaces smooth and blended so no roughness or unevenness shows after finishing and welded surface matches contours of adjoining surfaces.

C. Pipes and Tubes: Form simple and compound curves by bending members in jigs to produce uniform curvature for each repetitive configuration required; maintain cylindrical cross section of member throughout entire bend without buckling, twisting, cracking, or otherwise deforming exposed surfaces of handrail and railing components.

D. Exposed Surfaces: Polished, sanded, or otherwise finished; all surfaces smooth, free of burrs, barbs, splinters, and sharpness; all edges and ends rolled, rounded, or capped.

E. Factory Assembly: Assemble components in the factory to greatest extent possible to minimize field assembly. Clearly mark units for assembly in the field.

1.3 FINISHES, GENERAL

A. Comply with NAAMM's "Metal Finishes Manual for Architectural and Metal Products" for recommendations for applying and designating finishes.

B. Appearance of Finished Work: Variations in appearance of abutting or adjacent pieces are acceptable if they are within one-half of the range of approved Samples. Noticeable variations in the same piece are not acceptable. Variations in appearance of other components are acceptable if they are within the range of approved Samples and are assembled or installed to minimize contrast.

1.4 ALUMINUM FINISHES

A. Baked-Enamel, Powder-Coat Finish: Manufacturer's standard, baked, polyester, powder-coat finish complying with finish manufacturer's written instructions for surface preparation, including pretreatment, application, baking, and minimum dry film thickness.

1.5 STEEL AND GALVANIZED STEEL FINISHES

A. Baked-Enamel, Powder-Coat Finish: Manufacturer's standard, baked, polyester, powder-coat finish complying with finish manufacturer's written instructions for surface preparation, including pretreatment, application, baking, and minimum dry film thickness.

1.6 STAINLESS-STEEL FINISHES

A. Remove tool and die marks and stretch lines or blend into finish.

B. Grind and polish surfaces to produce uniform, directionally textured, polished finish indicated, free of cross scratches. Run grain with long dimension of each piece.

PART 2 - EXECUTION

2.1 EXAMINATION

A. Examine areas and conditions, with Installer present, for compliance with requirements for correct and level finished grade, mounting surfaces, installation tolerances, and other conditions affecting performance.

1. Proceed with installation only after unsatisfactory conditions have been corrected.

2.2 INSTALLATION, GENERAL

A. Comply with manufacturer's written installation instructions unless more stringent requirements are indicated. Complete field assembly of site furnishings where required.

B. Unless otherwise indicated, install site furnishings after landscaping and paving have been completed.

C. Install site furnishings level, plumb, true, and securely anchored at locations indicated on Drawings.

D. Post Setting: Set cast-in support posts in concrete footing with smooth top, shaped to shed water. Protect portion of posts above footing from concrete splatter. Verify that posts are set plumb or at correct angle and are aligned and at correct height and spacing. Hold posts in position during placement and finishing operations until concrete is sufficiently cured.

E. Posts Set into Voids in Concrete: Form or core-drill holes for installing posts in concrete to depth recommended in writing by manufacturer of site furnishings and 3/4 inch (19 mm) larger than OD of post. Clean holes of loose material, insert posts, and fill annular space between post and concrete with nonshrink, nonmetallic grout or anchoring cement mixed and placed to comply with anchoring material manufacturer's written instructions, with top smoothed and shaped to shed water.

F. Pipe Sleeves: Use steel pipe sleeves preset and anchored into concrete for installing posts. After posts have been inserted into sleeves, fill annular space between post and sleeve with nonshrink, nonmetallic grout or anchoring cement, mixed and placed to comply with anchoring material manufacturer's written instructions, with top smoothed and shaped to shed water.

2.3 CLEANING

A. After completing site furnishing installation, inspect components. Remove spots, dirt, and debris. Repair damaged finishes to match original finish or replace component.

END OF SECTION 323300